Steam Outlet

0701

TYLÖ® steam

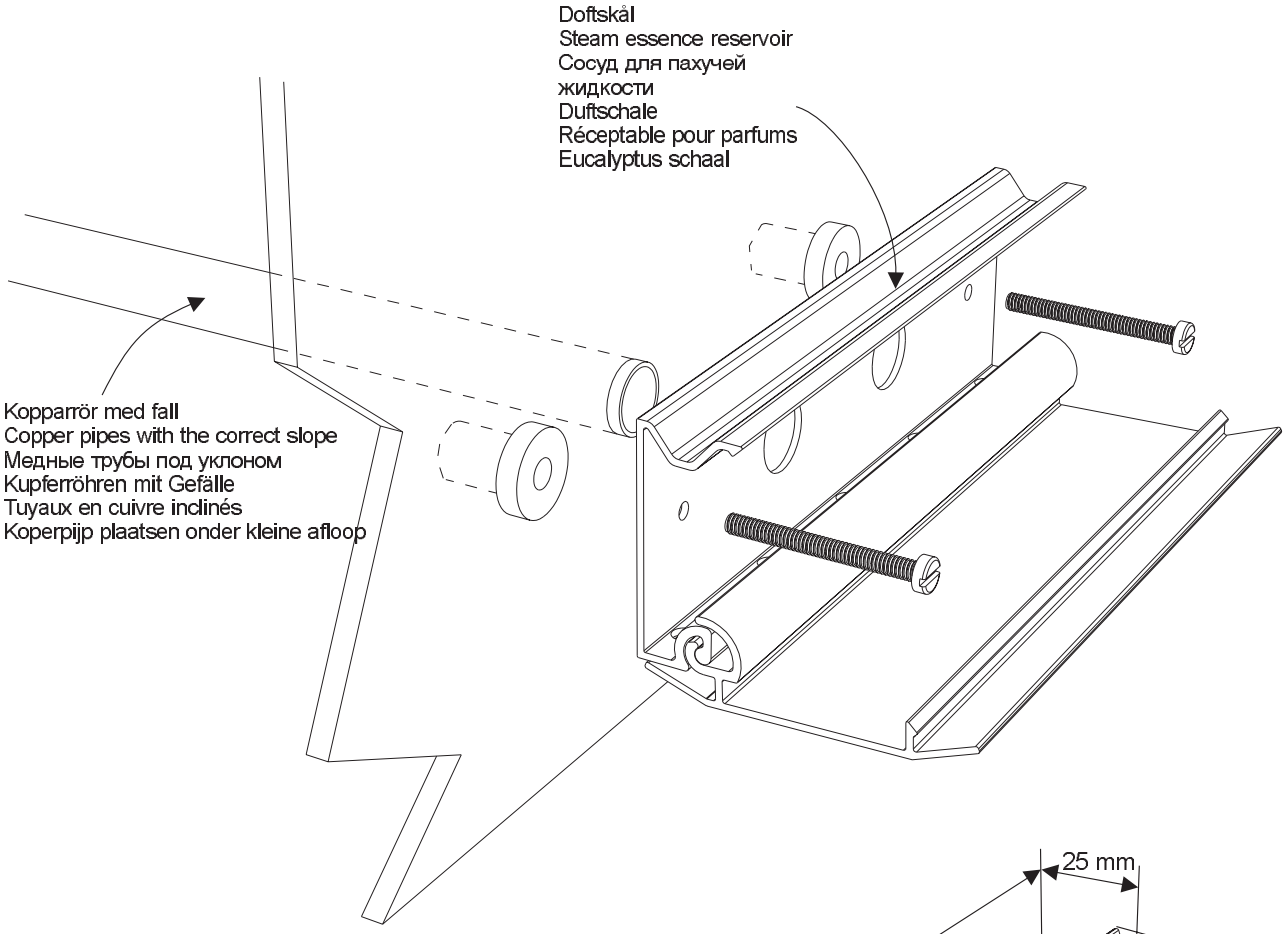

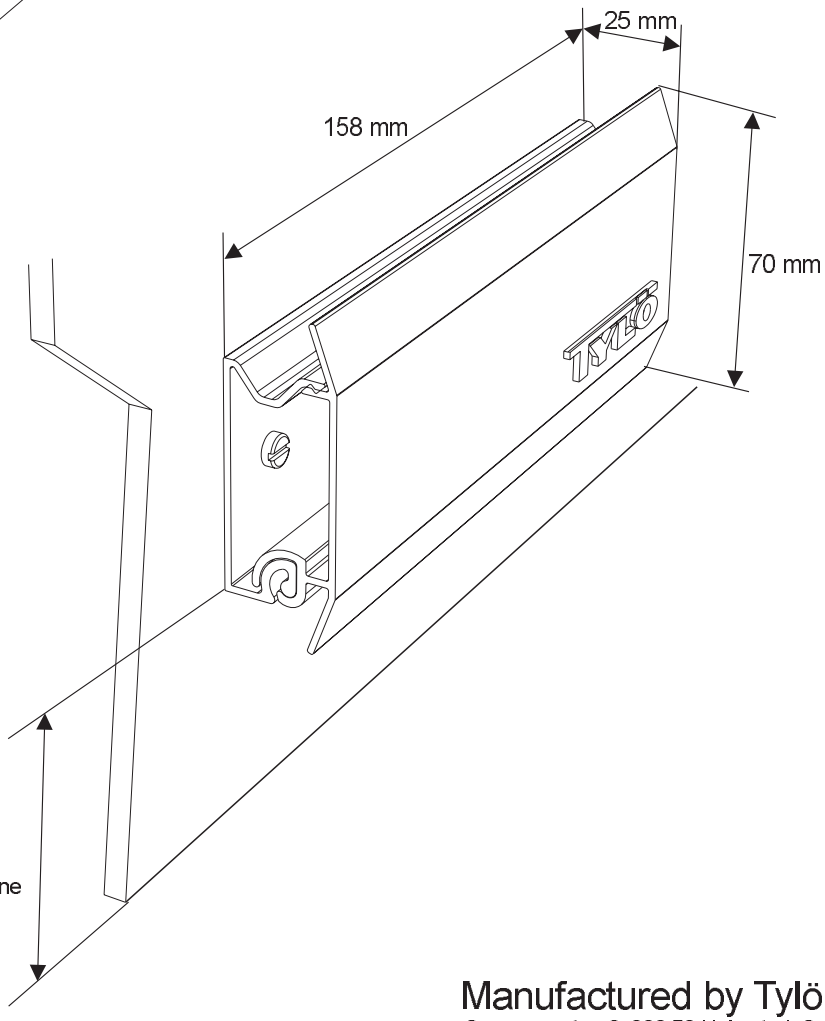

Manufactured by Tylö AB
Svarvaregatan 6, 302 50 Halmstad, Sweden
Tel +46 35 299 00 00, Fax +46 35 299 01 98
E-mail info@tylo.se, www.tylo.com

Art.nr 2900 0732